Flanges (mild steel):

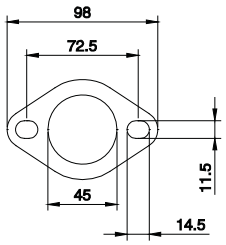

U034500

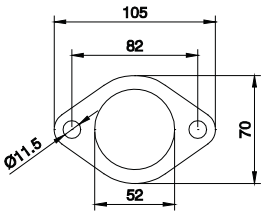

U035100

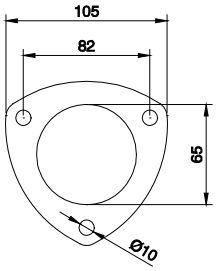

U036300

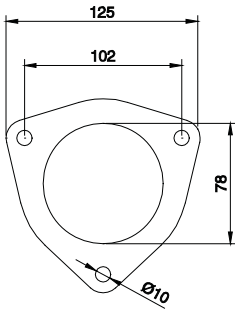

U037600

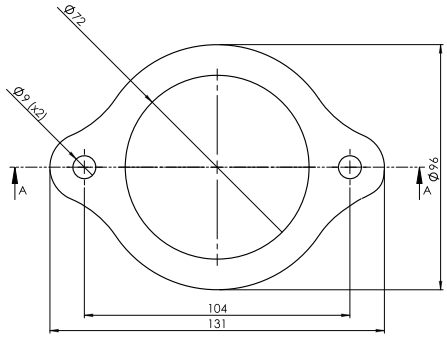

U032700